How to reduce the spike noise

■Objective

Improvements in performance of oscilloscopes have made it simpler than before to observe phenomena such as spike noise. Regarding, however, accurate evaluation, recognition of problems, and improvements, solutions depend on the skill of the engineer in charge regardless of the performance of the oscilloscope.
The following describes an evaluation method and various remedies. Use it as useful information for making performance improvements.

■ Causes of Spike Noise

When a DC/DC converter performs switching operations, the current passing through the Schottky barrier diode turns on or off. When it goes from on to off, a reverse current flows immediately for a very short moment. This momentary current is considered to be the cause of spike noise.

■ Evaluation Method

Our working or living environment has changed rapidly in recent years. It has become filled with electromagnetic waves due to the spread of cellular phones, fast CPU-equipped personal computers, and other electronic products. The coil of a DC/DC converter also emits electromagnetic waves. Therefore, it is necessary to make arrangements to make possible evaluation only of spike noise produced by a DC/DC converter circuit.

① Measurement point
The measuring point is the VOUT terminal of the DC/DC converter.

② Handling of oscilloscope
Select "Envelope" on the oscilloscope, which allows even a variable signal to show the maximum and minimum

③ Handling of the probe of oscilloscope
Remove the hook at its tip and the ground lead. A needle-like terminal and grounding metal will be exposed.
The needle-like terminal and ground metal are brought in contact with the measurement point for measurement.
This arrangement reduces noise entering the ground lead.

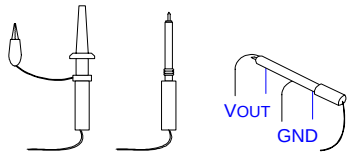

From left:
Ordinary probe
Hook and ground lead removed
Measurement using probe without hook and ground lead

■ Remedies

- Use a DC/DC converter that permits the use of a ceramic capacitor with excellent high-frequency characteristics as the output capacitor, CL.
- Insert a resistor between the gate terminal of FET and the EXT terminal of the DC/DC converter.
- Use a Schottky barrier diode of excellent reverse recovery time characteristics.
- Insert a ferrite bead in series with the Schottky barrier diode.
- Reduce the wiring lengths of external transistors and coils and place them away from the output if a high intermittent current flows through them.
- Place an output capacitor, CL, before the output.
- Insert a filter at the output (LC or RC low-pass filter).
- Use a coil of the closed magnetic circuit type.

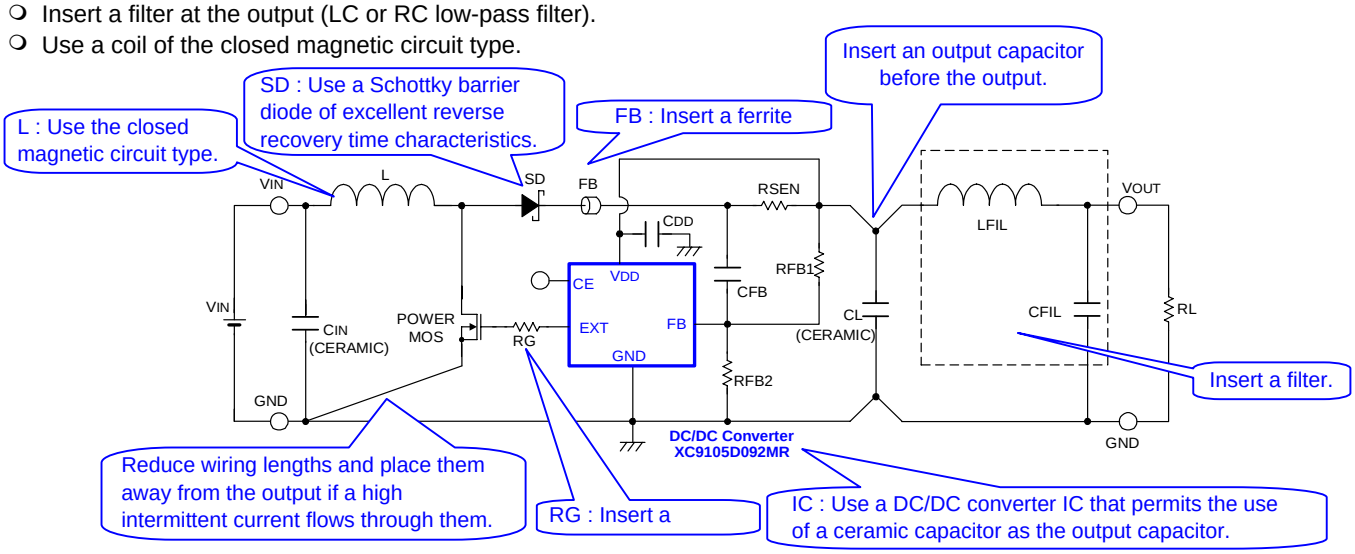

■Lastly

In general, a bypass capacitor (decoupling) is inserted between power source lines to ensure stable circuit operations.
The remedies explained above will counteract spike noise and other noise produced by other circuits, allowing few problems to occur. If, however, malfunction or performance degradation occurs, check first the bypass capacitor and ground wiring.