XC61CN (Open Drain) with Manual Reset Circuitry Voltage Detector

The XC61CN is an open drain output type of Reset IC. The device can be used with an optional push button reset switch. When the switch is pressed, the reset output goes to low. When the switch is released, the reset output starts to go up with a rate of CR delay time.

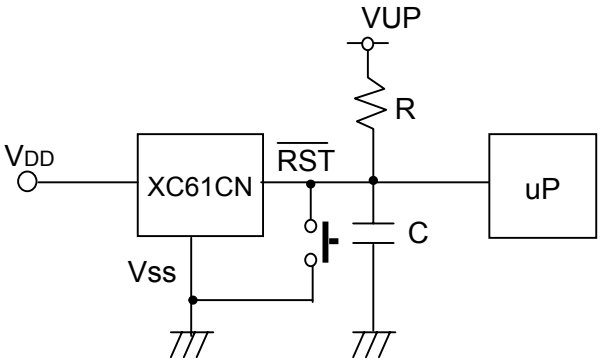

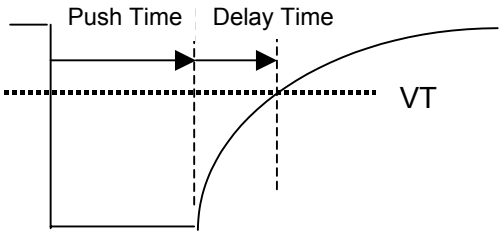

CR delay time can be calculated using the following formula.

Delay Time = -(C*R*LN(1-(VTH/VUP)))

C : Output Capacitor
R : Pull-up Resistor
VUP : Pull-up Voltage Supply
VTH : Reset Threshold Voltage

Example

VUP= 3.3 V
VTH= 2.5 V

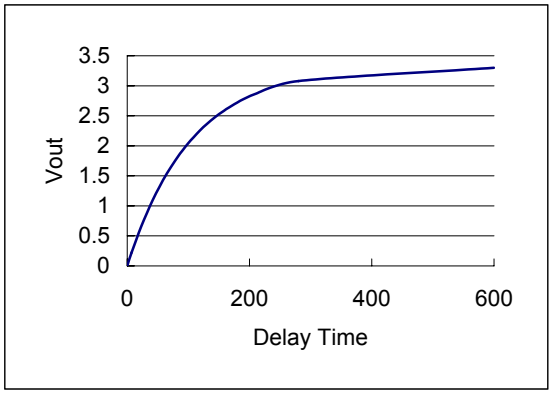

Delay (ms)	C (uF)	R (KΩ)	VTH (V)	VUP (V)	LN(1-(VTH/VUP))
146.525	0.47	220	2.5	3.3	-1.417

March 14, 2002