■PIN CONFIGURATION

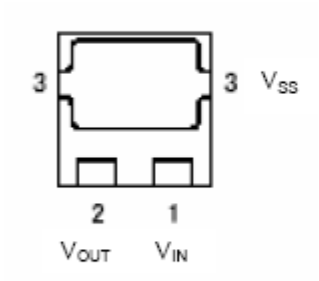

USP-3
(BOTTOM VIEW)

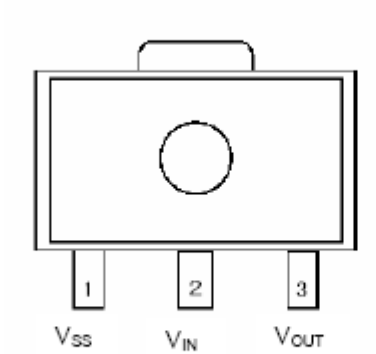

SOT-89
(TOP VIEW)
(Under Development)

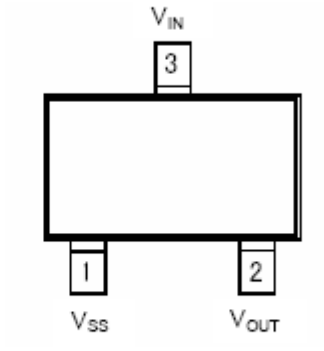

SOT-23
(TOP VIEW)
(Under Development)

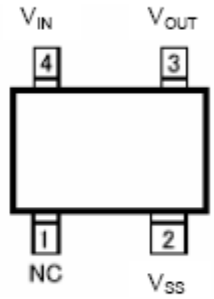

SSOT-24
(TOP VIEW)

●USP-3

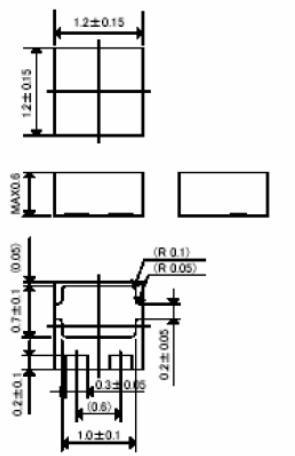

●SOT-89 (Under Development)

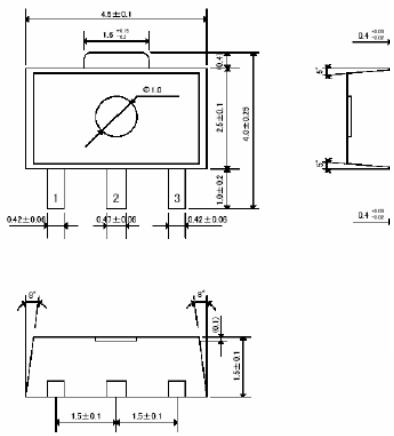

●SOT-23 (Under Development)

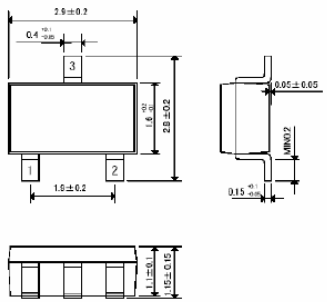
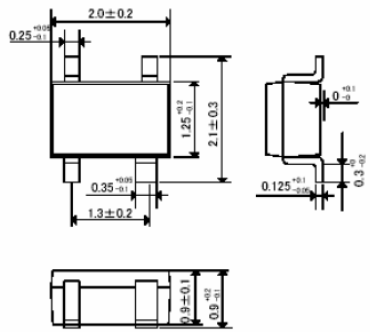
●SSOT-24